NX 1872 Series – Monthly Update

Welcome to NX

November 2019

Dear Siemens Customer:

We are proud to introduce the latest release of our product development solution. With this release, we continue to provide innovative ways to deliver solutions that meet the next generation of your product design, development, and manufacturing challenges. The new version of NX is robust and powerful, and it delivers advanced technologies for product design, development, and manufacturing in a single, multidisciplinary platform. It preserves best-in-class customer deployment readiness, and builds on the productivity and stability achievements of the previous release.

Sincerely,

Siemens Digital Industries Software

CONTENTS

NX AUTOMATIC UPDATE

Automatic updates are available.

Caveats

Reenabling Automatic Updates Button
If the login dialog that pops up on initiating the download of an update is closed:

1. An error message “Failed to download Updates” is displayed.
2. The “Automatic Updates” button is greyed out preventing further attempts to download the update.

To resolve this, a restart of the NX session will reenable the button for user interaction.

Siemens Cloud Connector Service Form
Users will see below issues while trying to login using Siemens Cloud Connector Service form:

1. The Siemens Cloud Connector Service login form embedded in NX does not have scroll bar. Users will have to re-size the window to see the “Sign In” button. This issue will be addressed in 1926.
2. Siemens Cloud Connector Service will remember the webkey login credentials entered by user even if user reboots his machine. To work around this, users will need to clear the cache on the web browser.

NX 1892

1892 UPDATES

1892 PROBLEM REPORTS

For a detailed list of PR fixes, see Fixed_Problem_Reports.csv included with the release documents.

Please see the table below for a summary of the PR updates included in this release.

Application	Count of PR Number
CAM	19
CAE	16
NXMANAGER	11
DRAFTING	9
TRANSLATOR	6
KDA	6
SYSENG	5
PMI	4
TC_FEATURES	3
CMM_INSPECTION	3
SHIP_DESIGN	2
NX_SHEET_METAL	2
PCB_EXCHANGE	1
MECHATRONICS	1
TECH_DATA_PKG	1
ASSEMBLIES	1
ROUTING_GENERAL	1
GATEWAY	1
Total	**92**

1892 ENHANCEMENTS

Please see below for a list of enhancements included in this release.

Line Designer: Fixer Planner

Introduction

Using dynamic in-process assembly objects in a study

In the Fixture Planner application, you can now:

- Load the study containing the dynamic in-process assemblies (DIPA) in the Planning Navigator in NX.
- View the notification about DIPA objects in NX, informing you when other users dynamically make changes to the design of a DIPA assembly.
- Accept the changes suggested by the other users in the DIPA in notifications, and update the DIPA.
- Ignore the DIPA updates, if a design review or a project review is pending.

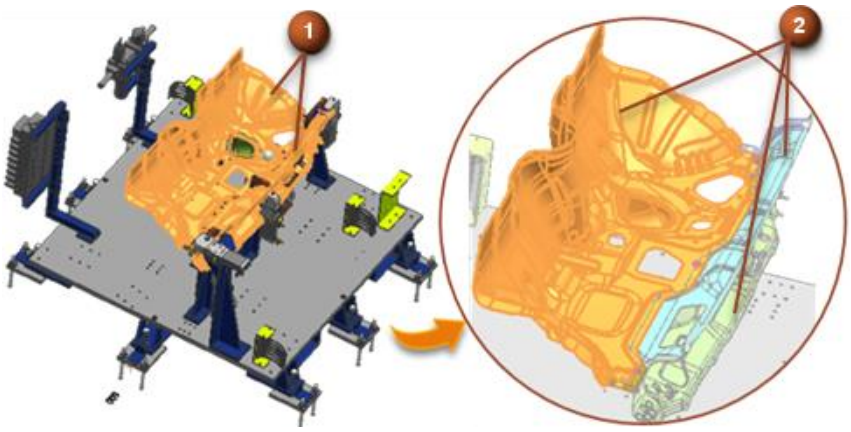

1 Dynamic in-process assembly

2 Components of the DIPA

Why should I use it?

You can now differentiate between the in-process assembly and the dynamic in-process assembly, and can now use DIPA objects effectively in the study.

Note:

In NX managed mode, collaborative tools such as Process Simulate and Manufacturing Process Planner use DIPA, and now Fixture Planner also supports DIPA.

Where do I find it?

Application	Fixture Planner

Technical Documentation

Using dynamic in-process assembly objects in a study

In the Fixture Planner application, you need to collaborate with process planning to check the product build-up sequence at the stations. This sequence decides how many and what assemblies are planned for a particular station. You also need to manage the in-process assemblies (IPA) and the dynamic inprocess assemblies (DIPA) that are consumed in a particular station in a study.

DIPA objects are the components of the dynamic assembly that you can define and create in Teamcenter, and that you can use in **Fixture Planner** in NX.

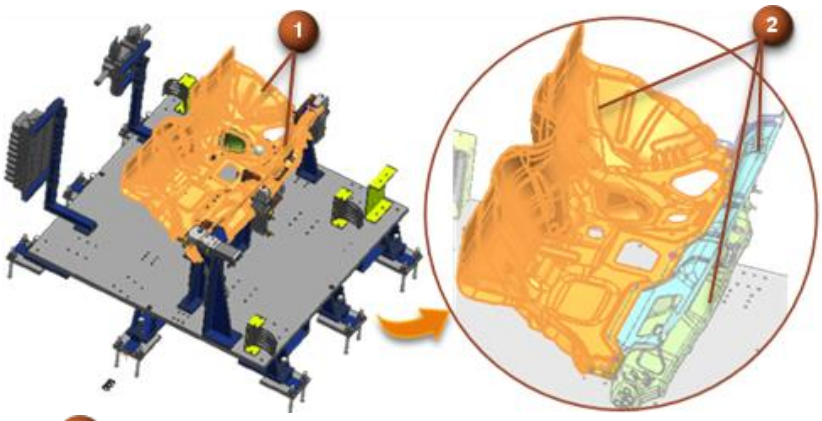

1 Dynamic in-process assembly

2 Components of the DIPA

Once you have DIPA objects in your study, you can:

- Load the study containing the DIPA objects in the **Planning Navigator**, in a **Fixture Planner** session in NX.
- View the notification about DIPA objects in NX, informing you when other users dynamically make changes to the design of a DIPA assembly.
- Accept the changes suggested by the other users in the DIPA in notifications, and update the DIPA.
- Ignore the DIPA updates, if a design review or a project review is pending

Where do I find it?

Application	Fixture Planner

What's New

Creating Driving Joints in a Kinematic Assembly

In the Fixture Planner application, you can now:

- Create a new **Driving** joint, which controls the movement of the kinematic assembly as a whole.
- Set an existing joint as a **Driving** joint in the Fixture Planner session in NX.
- Govern the movements of the kinematic assembly using **Driving** joints. All other joints response is based on the driving joint.

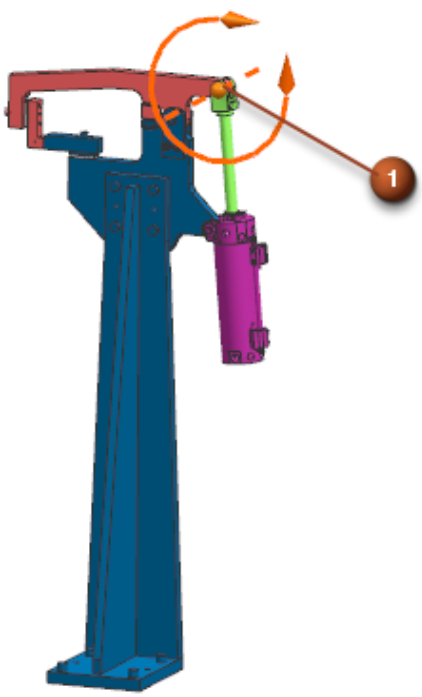

1 Revolute joint as driving joint

Why should I use it?

Now you can create active and non-active joints and focus on a particular active joint to create the poses

so the non-active joints appear hidden. You can see that a driving joint acts like a motor that controls the movement of the other joints in a kinematic assembly. This helps you to focus on the driving joints without any exposure to all other joints in the **Joint Jog** dialog box.

Where do I find it?

Application	Fixture Planner
Kinematics Navigator	Create a Slider joint or a Revolute joint→ **Set as Driving Joint** Or **Set as Driving Joint**

Technical Documentation

Working with rigid groups and joints in a kinematic assembly

In a fixture, when you work with the kinematic assemblies, you must specify the rigid groups and the joints. This helps you to position the components relative to each other, and to effectively study the motion analysis of a kinematic assembly.

Rigid group

A *rigid group* is the set of components that you define to group together and to treat as one rigid body. The rigid groups represent the kinematics definition of the components. In a rigid group, you can conveniently fix the components in place relative to one another. When you create the rigid groups, you add the individual rigid joints between the groups of the components.

In a rigid group, the group components can remain fix in a place relative to one another. This makes an easy and quick way to keep the components positioned properly in a kinematic assembly.

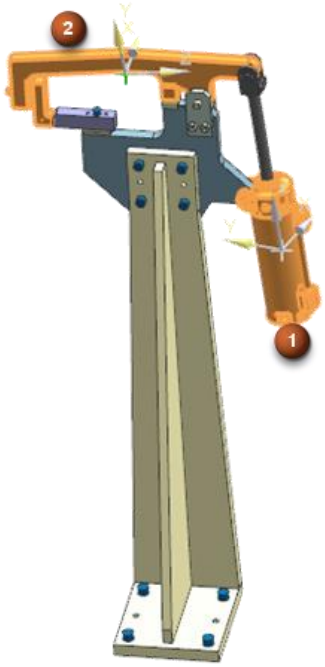

1 First component of a rigid group

2 Second component of a rigid group

Joint

A *joint* is the connection between one or more rigid groups. You can apply joints to control the movement of the components in the assembly, so you can position them correctly and have the desired mechanical motion.

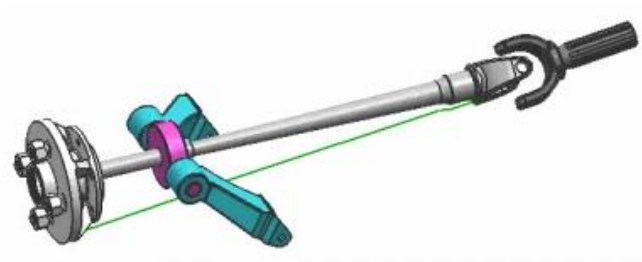

Several joints making the motion in a kinematic assembly

Once you create the rigid groups, you can specify the joints to connect the rigid groups to each other. You can create fixed, slider, and revolute joints for the given components in a kinematic assembly.

Fixed joint

A *fixed joint* joins one or more rigid groups to keep them in a fixed position relative to one another. A fixed joint allows zero degrees of freedom. Using a fixed joint, you can connect a rigid body to a fixed position such as the ground.

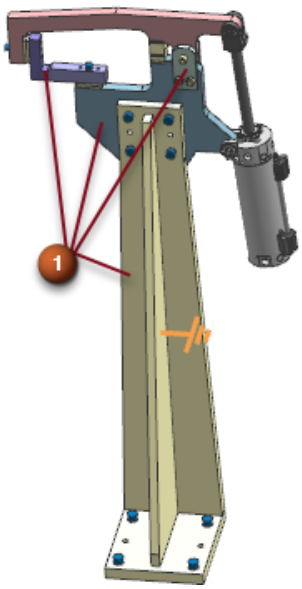

1 Fixed joint

Slider joint

A *slider joint* joins two or more rigid groups, and allows the components to translate along a single axis. A slider joint does not allow the components to rotate with respect to each other.

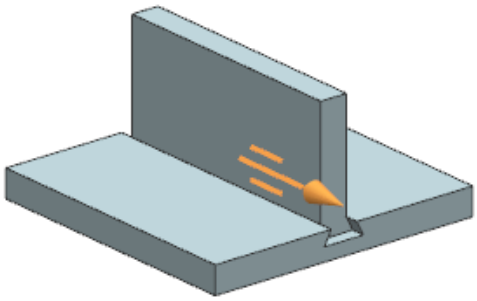

Revolute joint

A *revolute joint* joins two rigid groups, and allows the component to rotate around the joint origin. A revolute joint allows one rotational degree of freedom along an axis. It does not allow translational movement in any direction between the two components.

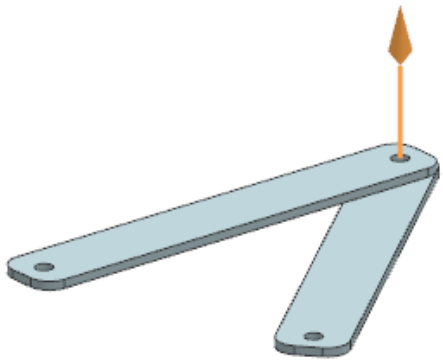

Driving joint

A *driving joint* drives the kinematic assembly as a whole. This is a joint between two rigid groups. When you set any joint as a driving joint, NX shows only this joint as active and editable in a kinematic assembly. NX hides all other joints and they are non-editable.

When you jog the driving joint, the other joints reacts based on the driving joint, and the whole kinematic assembly moves.

Note:

A driving joint acts like a motor that controls the movement of the other joints in a kinematic assembly.

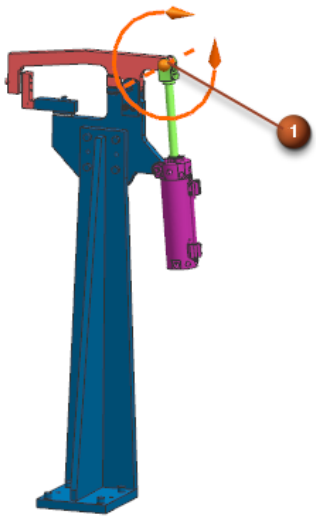

1 Revolute joint as Driving joint

Where do I find it?

Application	Fixture Planner
Command Finder	**Rigid Group**  **Fixed Joint**  **Slider Joint**  **Revolute Joint** 
Kinematics Navigator	Create a Slider joint or a Revolute joint→  **Set as Driving Joint** Or **Set as Driving Joint** 

What's New

Create joints and rigid groups in Kinematics Navigator

This set of procedures shows how to create rigid groups and add slider, fixed, revolute, and driving joints to connect the rigid groups.

At the beginning of each procedure, click **Kinematics Navigator**  in the Resource bar. In the **Planning Navigator**, select a fixture node from the kinematic assembly, right-click and select **Make Work Part**  .

Perform the tasks in the procedure to:

- Create a rigid group in a kinematic assembly
- Create a fixed joint
- Create a revolute joint
- Create a slider joint
- Create a driving joint

Create a rigid group in a kinematic assembly

This procedure shows how to create rigid groups in a kinematic assembly.

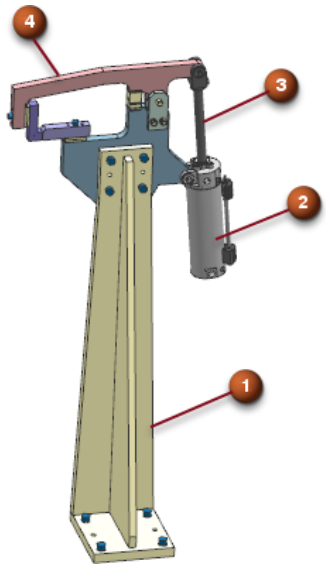

1 Base

2 CylinderBody

3 CylinderRod

4 ClampArm

1. Choose **Home** tab→**Kinematics** group→**Kinematics Editor**.

2. In the **Kinematics Navigator**, click.

3. In the **Rigid Group** dialog box, in the **Rigid Group Objects** group, select the objects from the kinematic assembly.

   NX adds the selected objects in the **Select Objects** table.

4. In the **Name** group, type a name **Base** for the rigid group. You can use alphanumeric characters.

5. Click **OK**.

   NX creates the rigid group as **Base**. You can also create the rigid groups as **ClampArm**, **CylinderRod**, and **CylinderBody**.

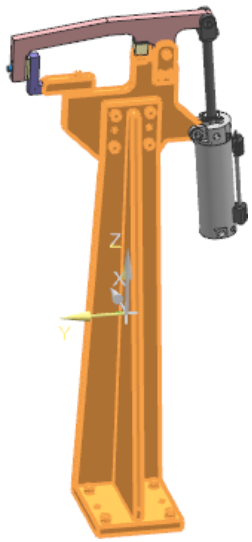

Create a fixed joint

This procedure shows how to create a fixed joint using the rigid groups in a kinematic assembly that you created.

1. In the **Kinematics Navigator**, click  .

2. In the **Fixed Joint** dialog box, in the **Rigid Group**, click **Select Rigid Group** and select the **Base** group created earlier.

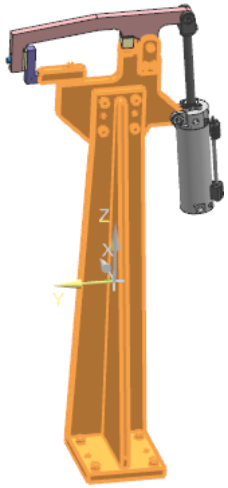

3. In the **Name** group, type a name **Fixed_Base** for the fixed joint. You can use alphanumeric characters.

4. Click **OK**.

   NX creates the fixed joint as **Fixed_Base**.

Create a revolute joint

This procedure shows how to create a revolute joint, using the rigid groups in a kinematic assembly that you created.

1. In the **Kinematics Navigator**, click  .

2. In the **Revolute Joint** dialog box, in the **Rigid Groups** group, click **Select Source Rigid Group**, and select the **Base** group created earlier.

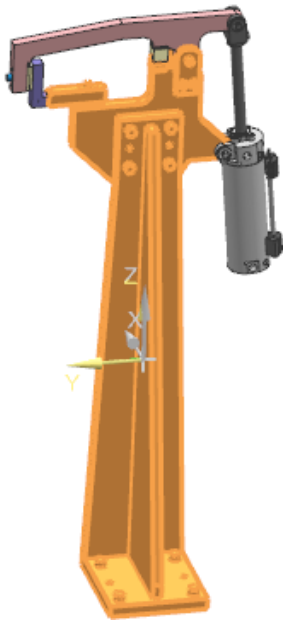

3. Click **Select Target Rigid Group** and select the **ClampArm** group created earlier.

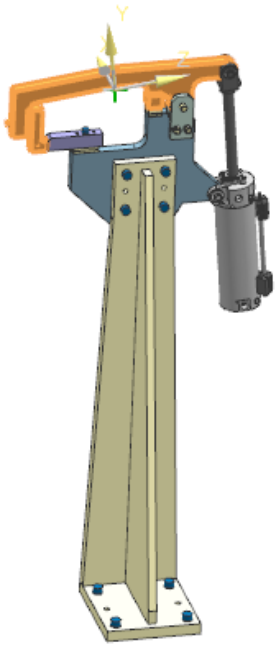

4. In the **Axis** group, from the vector list, select **Curve/Axis Vector** and select the axis.

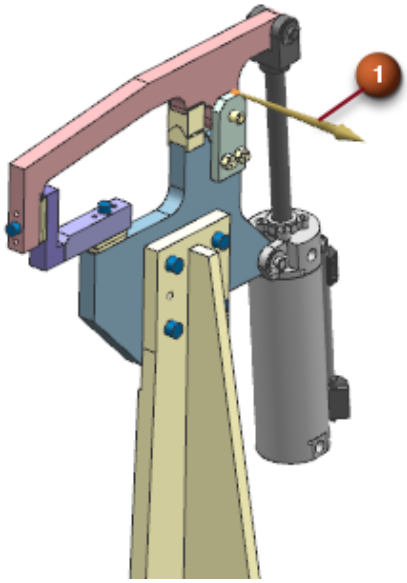

1 Curve axis vector

5. Click **Point Dialog**.

6. In the **Point** dialog box, in the **Type** group, choose **Existing Point**, and select the point shown, and click **OK**.

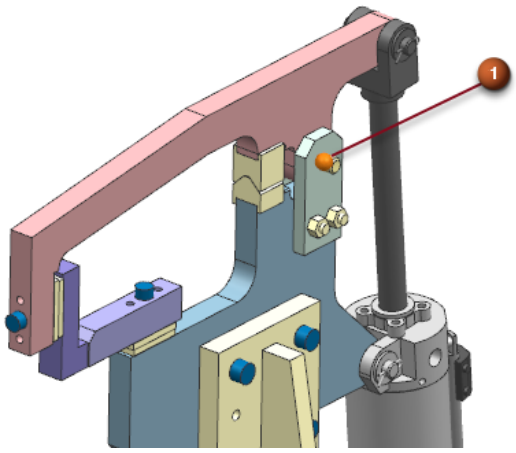

1 Point on a rigid group

7. In the **Limits** group, set the following:

Upper = 160

Lower = 2

8. In the **Start Angle** group, type 10.

9. In the **Name** group, type **Revolute_1** for the revolute joint. You can use alphanumeric characters.

10. Click **OK**.

NX creates the revolute joint as **Revolute_1**.

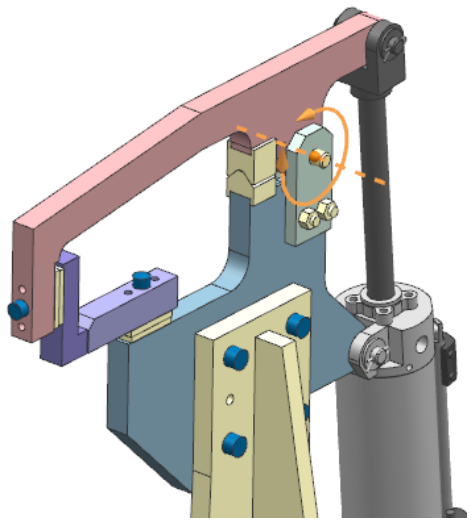

Create a slider joint

This procedure shows how to create a slider joint, using the rigid groups in a kinematic assembly that you created.

1. In the **Kinematics Navigator**, click  .

2. In the **Slider Joint** dialog box, in the **Rigid Groups** group, click **Select Source Rigid Group**, and select the **CylinderRod** group created earlier.

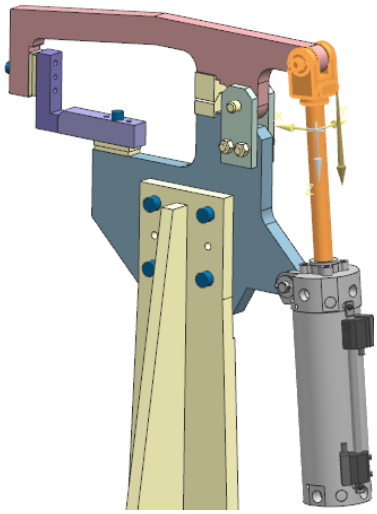

3. Click **Select Target Rigid Group** and select the **ClampArm** group created earlier.

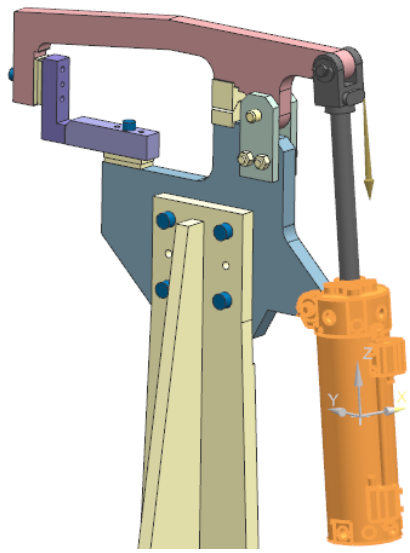

4. In the **Axis** group, from the vector list, select **Curve/Axis Vector** and select the axis.

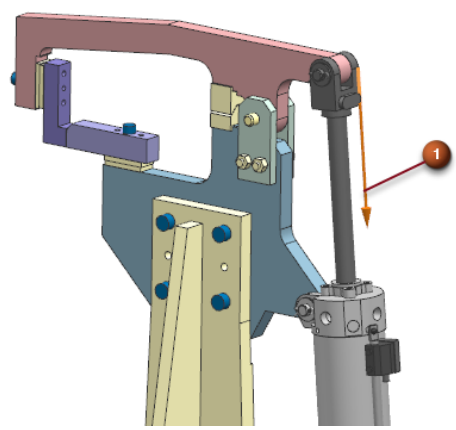

1 Curve axis vector

5. In the **Limits** group, set the following:

Upper = 140

Lower = 1

6. In the **Offset** group, type 2.

7. In the **Name** group, type **Slider_1** for the slider joint. You can use alphanumeric characters.

8. Click **OK**.

   NX creates the slider joint as **Slider_1**.

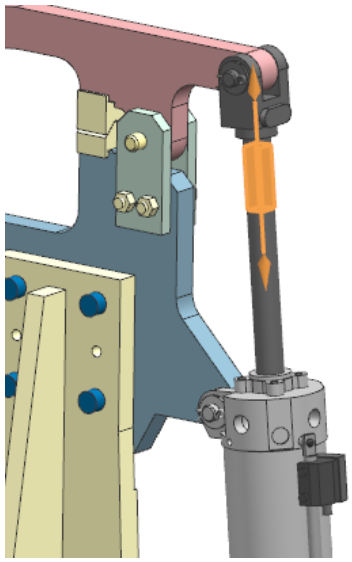

Create a driving joint

This procedure shows how to create a driving joint, using the rigid groups in a kinematic assembly that you created.

1. In the **Kinematics Navigator**, in the **Joints** group, select any revolute joint.

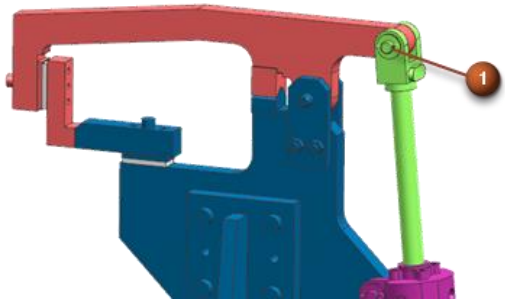

1 Revolute joint

2. Right-click the revolute joint and choose **Set as Driving Joint**  .

   The revolute joint is now the driving joint.

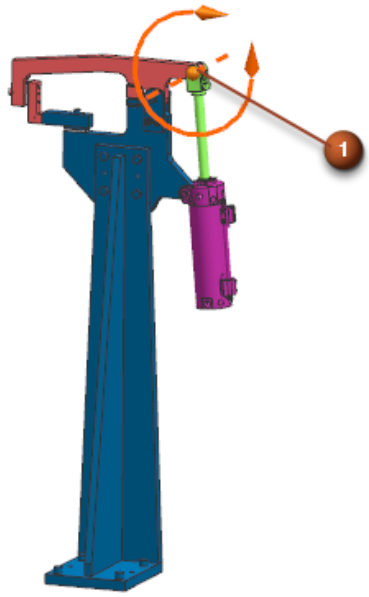

1 Revolute joint as Driving joint

Whats New

Distinguishing rigid groups by color

In the Fixture Planner application, you can now:

- View the rigid group colors in the **Kinematics Navigator** tree and in the graphics window. Thus, you can identify the rigid groups in a kinematic assembly.
- Identify the rigid group objects by colors and the non-rigid group objects by gray tones.
- Display the colors of the newly created and edited rigid group objects.

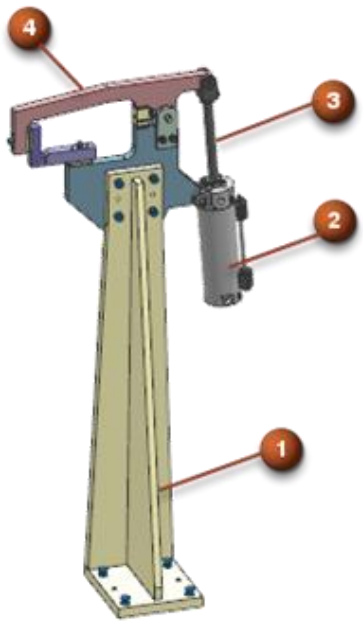

Rigid groups without colors

Rigid groups with colors

1 Base

2 CylinderBody

3 CylinderRod

4 ClampArm

Why should I use it?

Now you can effectively distinguish between the rigid groups and the non-rigid groups in a kinematic assembly. You can also identify group of objects that helps to understand the details of a kinematic assembly.

Where do I find it?

Application	**Fixture Planner**
Resource bar	**Kinematics Navigator**  →**Rigid Group Color** 

Technical documentation

Identifying rigid groups using colors in a kinematic assembly

A rigid group is a group of components that remain in fixed positions relative to each other; they do not move. Rigid groups can be connected by joints and form a kinematic assembly. While working in a kinematic assembly, you must define the rigid groups. This helps you to form a kinematic loop using the rigid groups.

Once you define the rigid groups, you can distinguish them using colors. Use the **Rigid Group Color**  command to display the colors of the objects in the rigid groups.

Once you define the rigid groups, you can:

- View the rigid group colors in the **Kinematics Navigator** tree and in the graphics window.
- Identify the rigid group objects by colors and the non-rigid group objects by gray tones.

  Note: When you switch between work parts, NX colors the rigid groups in the active work part.

- Display the colors of the newly created and edited rigid group objects.

  Note: When you close the **Kinematics Navigator**, NX removes the color of all the rigid group objects.

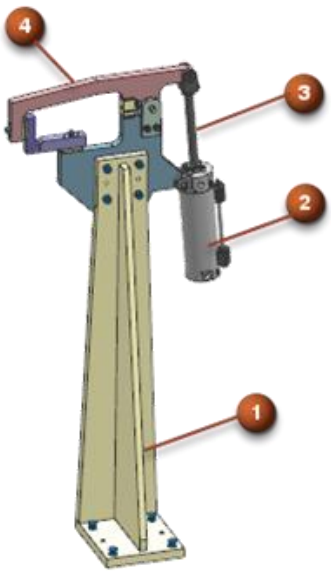

Rigid groups without colors

Rigid groups with colors

1 Base

2 CylinderBody

3 CylinderRod

4 ClampArm

Where do I find it?

Application	**Fixture Planner**
Resource bar	**Kinematics Navigator**  **→Rigid Group Color** 

What's New

Supporting kinematic loops in a station

In the **Fixture Planner** application, you can now:

- Create poses for joints that have upper and lower limits in a kinematic assembly in NX.
- Define the driving joints, so you can hide all other joints that are not acting as a motor or an actuator in the **Joint Jog** dialog box.
- Create complex mechanisms that have three or more rigid groups working together.

- Use **Joint Jog** to move a unit design that has three or more joints defined for movement.

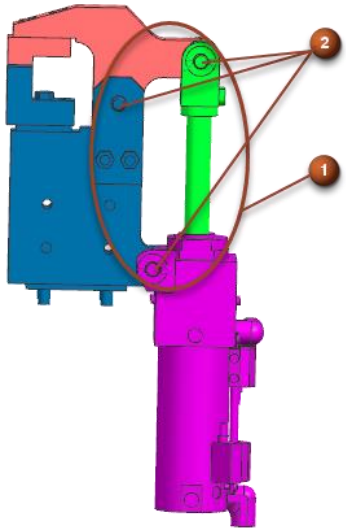

1 Kinematic loop

2 Joints of a kinematic loop

Why should I use it?

Now you can jog the joints in the kinematic loops of a kinematic assembly in **Fixture Planner**. You can also move a unit design with three or more joints that have kinematic loops defined for the movement.

Where do I find it?

Application	**Fixture Planner**
Resource bar	**Joint Jog**

Technical documentation

Working with kinematic loops in a station

When you work in a fixture assembly, you need to understand the working behavior of the unit designs, the rigid groups, and the weld guns. When you work with a unit design,it is a part of a fixture assembly that helps to hold the products for the welding process in the station. In kinematics, a unit design is a combination of the rigid groups that are locked together using joints.

The joints with the rigid groups and the driver joints form the kinematic loop in a unit design. In order to make the kinematic loop work, you need to define a driving joint. In a loop kinematics, you can create critical mechanisms where three or more joints work together.

In loop kinematics, you can use the **Joint Jog** command to move a unit design that has three or more joints.

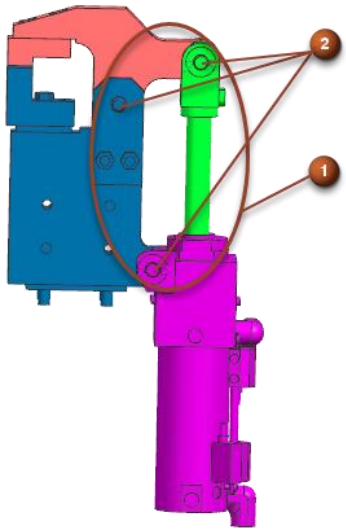

1 Kinematic loop

2 Joints of a kinematic loop

If you have a kinematic loop in the unit design, you can:

- Create poses for joints that have upper and lower limits in a kinematic assembly in the **Fixture Planner** session in NX.
- Define the driving joints, so you can hide all other joints that are not acting as a motor or an actuator in the **Joint Jog** dialog box.
- Create complex mechanisms that have three or more rigid groups working together.
- Use **Joint Jog** to move a unit design that has three or more joints defined for movement.

Where do I find it?

Application	**Fixture Planner**
Resource bar	**Joint Jog** 

NX 1888

1888 UPDATES

1888 PROBLEM REPORTS

For a detailed list of PR fixes, see Fixed_Problem_Reports.csv included with the release documents.

Please see the table below for a summary of the PR updates included in this release.

Application	Count of PR Number
SYSTEM	22
CAE	11
ASSEMBLIES	10
CAM	10
SHIP_DESIGN	10
ROUTING_GENERAL	6
NX_SHEET_METAL	4
NXMANAGER	4
TRANSLATOR	4
GATEWAY	3
CMM	2
DRAFTING	2
TC_FEATURES	2
TRANSLATORS	2
AUTOMATN_DESIGN	1
DMU	1
KDA	1
MECHATRONICS	1
PMI	1
SYSENG	1
Total	**98**

1888 ENHANCEMENTS

Please see below for a list of enhancements included in this release.

ERs:

- ER9449370 - Improve assembly Load performance for large assembly
- ER9518853 - Support view on Shell (shell expansion / view drawings)

NX 1884

1884 UPDATES

1884 PROBLEM REPORTS

For a detailed list of PR fixes, see Fixed_Problem_Reports.csv included with the release documents.

Please see the table below for a summary of the PR updates included in this release.

Application	Count of PR Number
SYSTEM	22
CAE	19
NASTRAN	16
CAM	7
KDA	5
TRANSLATOR	5
ASSEMBLIES	5
SYSENG	4
SHIP_DESIGN	3
FLEXIBLE_PIPE	2
NXMANAGER	2
DESIGN	2
DRAFTING	1
CMM_INSPECTION	1
MECHATRONICS	1
ADD_FIXED_PLANE	1
Total	**96**

1884 ENHANCEMENTS

Please see below for a list of enhancements included in this release.

Computer Aided Manufacturing: Multiselect for Facet Bodies

Introduction

Multiselect for Facet Bodies

You can now use the multiselect gestures to select multiple facet bodies for part, blank, or check geometry. In an assembly, NX adds facets from all components within the multiselect gesture to the geometry definition. NX creates a separate geometry set for each facet body and displays an alert message to tell you that multiple geometry sets were created.

Geometry to select	
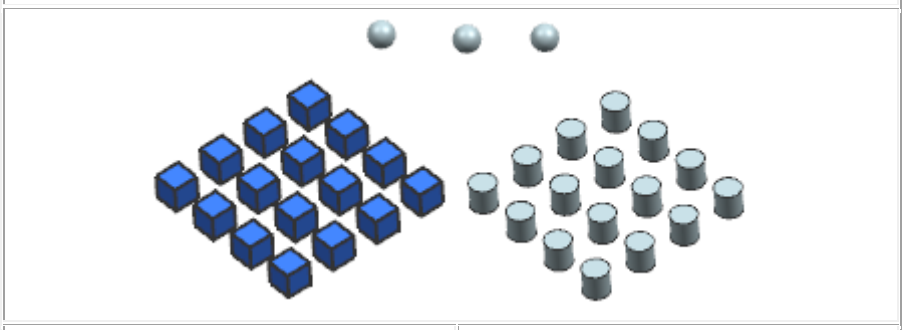	
16 separate facet bodies 	19 separate solid bodies 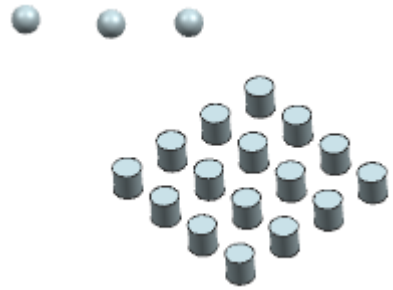

Type Filter = Facet Body	**Type Filter = Solid Body**
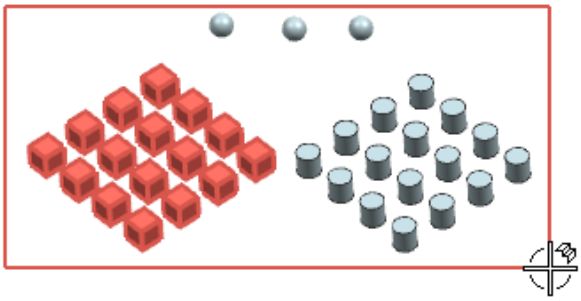	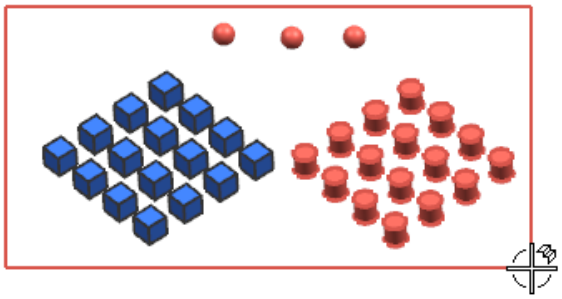
NX creates 16 geometry sets. Each set contains one facet body.	NX creates one geometry set that contains 19 solid bodies.

Type Filter = Facet Body	Type Filter = Solid Body
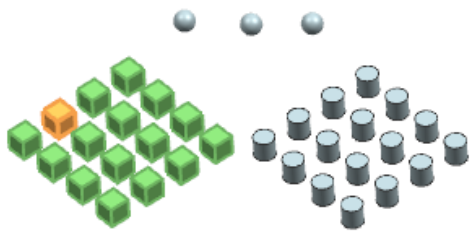	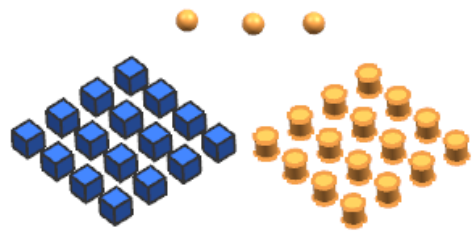
NX creates 16 geometry sets. Each set contains one facet body. 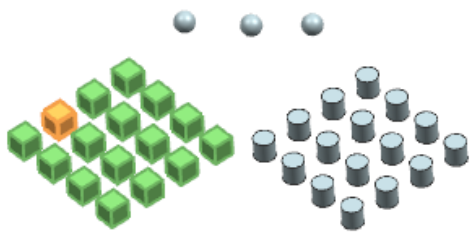	NX creates one geometry set that contains 19 solid bodies. 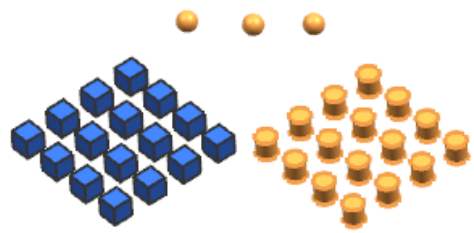

Type Filter = No Selection Filter or Detailed Filtering  = Facet Body and Solid Body
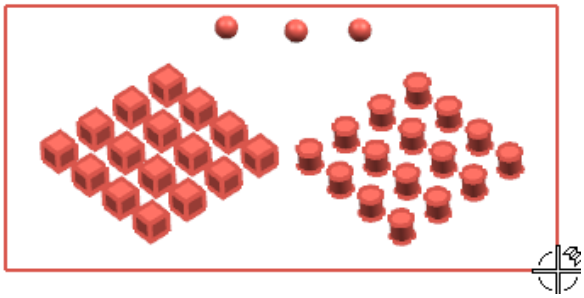
NX creates 17 geometry sets. One geometry set that contains 19 solid bodies, and 16 geometry sets that each contain one facet body.

Type Filter = No Selection Filter or Detailed Filtering = Facet Body and Solid Body
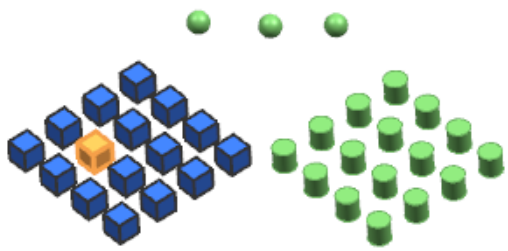

Note:

In the alert message ignore the following statement: `Suspect geometry items were placed in separate sets.` This statement will be removed in a future release.

Where do I find it?

Application	Manufacturing
Location in dialog box	**Workpiece** dialog box→**Geometry** group
Top Border bar	**Type Filter** or **General Selection Filters** →**Detailed Filtering**

Computer Aided Manufacturing: Hole Milling and Thread Milling Cycles

Introduction

Hole Milling Cycle Output

You can now output either single moves or machine cycles for hole milling operations. NX outputs two new MOM events to the postprocessor with the machine cycle: `MOM_mill_hole` and `MOM_mill_hole_move`. You must enhance existing postprocessors to support the new MOM events.

To output machine cycles, use the new **Motion Output** parameter to select **Machine Cycle**.

Note:

Because cycles are controller specific, the hole milling operations support a limited set of basic functionality.

Parameter differences

The **Machine Cycle** output supports the **Helical** and **Circular** cut patterns only.

Parameters that are handled by the machine cycle on the controller do not appear in the dialog box. These include the following:

Path Settings	Cutting Parameters	Non-cutting Moves
• **Axial Stepover** • **Radial Stepover** • **Offset from Start Diameter**	• **Minimum Helix Diameter** • **Cleanup Passes** • **Feed Adjustment on Arcs** • **Top Offset**	• **Cutter Compensation** • **Overlap** parameters • **Engage** parameters • **Retract** parameters

Output differences

Machine Cycle Output

```
GOTO/0.0000,0.0000,0.2000,0.0000000,0.0000000,1.0000000
PAINT/COLOR,1
RAPID
GOTO/0.0000,0.0000,0.0986
CYCLE/MILL,HOLE,HELICAL,RAPTO,0.0000,FEDTO,-0.6586,RTRCTO,0.0000,IPM,10.0000
PAINT/COLOR,3
GOTO/0.0000,0.0000,0.0986
CYCLE/OFF
```

Single Moves Output

```
GOTO/0.0000,0.0000,0.2236,0.0000000,0.0000000,1.0000000
PAINT/COLOR,42
FEDRAT/IPM,10.0000
GOTO/0.6581,0.1499,0.2236
CIRCLE/0.6118,0.3532,0.2236,0.0000000,0.0000000,1.0000000,0.2085,0.0020,0.50
00,1.7500,0.0000
GOTO/0.7924,0.4575,0.2236
PAINT/COLOR,3
CIRCLE/0.0000,0.0000,-
0.5600,0.0000000,0.0000000,1.0000000,0.9150,0.0020,0.5000,1.7500,0.0000,TIME
S,2
GOTO/0.6445,-0.6495,-0.5600
CIRCLE/0.0000,0.0000,-
0.5600,0.0000000,0.0000000,1.0000000,0.9150,0.0020,0.5000,1.7500,0.0000
GOTO/0.6495,0.6445,-0.5600
CIRCLE/0.0000,0.0000,-
0.5600,0.0000000,0.0000000,1.0000000,0.9150,0.0020,0.5000,1.7500,0.0000
GOTO/-0.6445,0.6495,-0.5600
CIRCLE/0.0000,0.0000,-0.5600,0.0000000,0.0000000,-
1.0000000,0.9150,0.0020,0.5000,1.7500,0.0000
GOTO/-0.6495,-0.6445,-0.5600
CIRCLE/0.0000,0.0000,-0.5600,0.0000000,0.0000000,-
```

```
1.0000000,0.9150,0.0020,0.5000,1.7500,0.0000
GOTO/0.6445,-0.6495,-0.5600
PAINT/COLOR,7
CIRCLE/0.4977,-0.5014,-0.5600,0.0000000,0.0000000,-
1.0000000,0.2085,0.0020,0.5000,1.7500,0.0000
GOTO/0.5957,-0.3174,-0.5600
GOTO/0.0000,0.0000,-0.5600
PAINT/COLOR,1
```

Where do I find it?

Application	Manufacturing
Prerequisite	You must customize the **Hole Milling** dialog box to add **Motion Output** to the **Path Settings** group.
Location in dialog box	[Hole milling operation] dialog box→**Path Settings** group→ **Motion Output**→**Machine Cycle** or **Single Moves**

Thread Milling Cycle Output

You can now output either single moves or machine cycles for thread milling operations. NX outputs two new MOM events to the postprocessor with the machine cycle: `MOM_mill_hole_thread` and `MOM_mill_hole_thread_move`. You must enhance existing postprocessors to support the new MOM events.

To output machine cycles, use the new **Motion Output** parameter to select **Machine Cycle**.

Note:

Because cycles are controller specific, the thread milling operations support a limited set of basic functionalities.

Parameter differences

Parameters that are handled by the machine cycle on the controller do not appear in the dialog box. These include the following:

Path Settings	Cutting Parameters	Non-cutting Moves
• **Axial Stepover** • **Radial Stepover** • **Spring Passes**	• **Cleanup Passes** • **Feed Adjustment on Arcs** • **Top Offset**	• **Cutter Compensation** • **Engage** parameters • **Retract** parameters

Machine Cycle output adds the **Minimal Clearance** parameter.

Output differences

Machine Cycle Output
RAPID GOTO/-74.9449,2.8754,0.0000 CYCLE/MILL,HOLE,THREAD,RAPTO,0.0000,FEDTO,10.0000,RTRCTO,0.0000,MMPM,250.000 0 PAINT/COLOR,31 GOTO/-74.9449,2.8754,0.0000 CYCLE/OFF

Single Moves Output
RAPID GOTO/-74.9449,2.8754,25.0000,0.0000000,0.0000000,1.0000000 PAINT/COLOR,211 RAPID GOTO/-74.9449,2.8754,-10.3750 PAINT/COLOR,42 FEDRAT/MMPM,250.0000 CIRCLE/-75.2574,3.4167,-10.0000,0.0000000,0.0000000,- 1.0000000,0.6250,0.0600,0.5000,7.5000,0.0000 GOTO/-75.5699,3.9579,-10.0000 PAINT/COLOR,31 CIRCLE/-74.9449,2.8754,-8.5000,0.0000000,0.0000000,- 1.0000000,1.2500,0.0600,0.5000,7.5000,0.0000 GOTO/-75.5699,3.9579,-8.5000 PAINT/COLOR,37 CIRCLE/-75.2574,3.4167,-8.1250,0.0000000,0.0000000,- 1.0000000,0.6250,0.0600,0.5000,7.5000,0.0000 GOTO/-74.9449,2.8754,-8.1250

Where do I find it?

Application	Manufacturing
Prerequisite	You must customize the **Thread Milling** dialog box to add **Motion Output**to the **Path Settings** group.
Location in dialog box	[Thread milling operation] dialog box→**Path Settings** group→ **Motion Output**→**Machine Cycle** or **Single Moves**

Add Machine Cycle Output to a Hole Milling or Thread Milling Dialog Box

You must customize the **Hole Milling** or the **Thread Milling** dialog box to output machine cycles.

1. In the Operation Navigator, right-click the operation to customize, and choose **Object→Customize ...**

2. In the **Customize Dialog** dialog box, in the **Items Used** group, from the list, select **Group: Path Settings**.

3. In the **Items to Add** group, from the **Dialog Item Type** list, select **Customizable Item**.

4. From the list, select **Cycle - Canned Cycle**.

   The **Cycle - Canned Cycle** item adds the **Motion Output** list to the operation dialog box.

5. In the **Items to Add** group, click **Add to Dialog**  .

   The **Cycle - Canned Cycle** parameter appears within the **Path Settings** group.

6. (Optional) Use the up or down arrows  /  to adjust the position of **Cycle - Canned Cycle** in the **Items Used** list.

7. In the **Customize Dialog** dialog box, click **OK** to save your changes to the dialog box.

NX 1880

1880 UPDATES

1880 PROBLEM REPORTS

For a detailed list of PR fixes, see Fixed_Problem_Reports.csv included with the release documents.

Please see the table below for a summary of the PR updates included in this release.

Applications	Count of PR Number
CAM	15
CAE	10
SHIP_DESIGN	4
SYSTEM	4
CMM_INSPECTION	3
KDA	3
ADD_FIXED_PLANE	2
DESIGN	2
TRANSLATOR	2
ROUTING_MECH	1
Total	**46**

1880 ENHANCEMENTS

Please see below for a list of enhancements included in this release.

ERs

- ER7774710 – Request to create the scanning path while rotating table
- ER9447573 – Add support for analog scanning probe filters via the GEOALG statements to NX CMM
- ER9449040 – Enhance DMIS and GD&T logical check in NX CMM similar to Inspector DMIS engine

Automation Designer: Electrical BOM

Introduction

Bill of Material

Use the **Bill of Material** command to create an electrical Bill of Material (BOM). An electrical BOM contains only electrical products, such as switches, DI/DO modules, and interface modules.

Teamcenter Compatibility

You can only use this feature with Teamcenter 12.2.

Automation Designer stores electrical BOMs in Teamcenter. Therefore, you can exchange them directly with ERP systems and suppliers. Procurement departments often use BOMs for ordering system components or generating reports.

An electrical BOM provides an overall part summary of one or more electrical products. You can create either an electrical BOM for your entire project, or a partial electrical BOM for parts of your project. You can create multiple electrical BOMs out of your project or you can create new revisions of the already existing electrical BOM.

Before you Start

The electrical BOM generates empty lines in Teamcenter if the products are checked out during electrical BOM generation.

Before you start with the generation of the electrical BOM, please make sure that you successfully save the project. This will ensure that all objects are checked-in and the generation can start.

Application	Automation Designer
Command Finder	**Bill of Material** 

Create an Electrical BOM

1. Choose **Collaboration** tab→**Teamcenter** group→**Bill of Material** 
2. In the **Create BOM in Teamcenter** dialog box, from the list, select **Create New**.
3. In the **Name and Attributes** group, double-click the **Value** cell in the **ID** row.
4. (Optional) Change the name.
5. In the **Source** group, from the **Scope of Bill of Material** list, select either **Entire Project** or **Partial**.

If you select **Partial**, in the aspect navigators, select one or more parent objects to define the scope of the electrical BOM.

6. In the **Location** group, browse to the location where you want to store the BOM.

7. Click **OK**.

Create a New Revision of an Existing BOM

1. Choose **Collaboration** tab→**Teamcenter** group→**Bill of Material**  .

2. In the **Create BOM in Teamcenter** dialog box, from the list, select **Create New Revision of Existing**.

3. In the **Existing Bill of Material** group, select the BOM for which you want to create a new revision.

4. In the **Source** group, from the **Scope of Bill of Material** list, select either **Entire Project** or **Partial**.
   If you select **Partial**, in the aspect navigators, select one or more parent objects to define the scope of the electrical BOM.

5. Click **OK**.

Create BOM in Teamcenter Dialog Box

Creation list	**Create New** Lets you create a new BOM. **Create New Revision of Existing** Lets you create a new revision of an existing BOM.
Existing Bill of Material	
Available if you set the Creation list to **Create New Revision of Existing**.	
Project	Displays the name of the open project.
Existing bill of material list	Lists the existing BOMs in the project.
Name and Attributes	
Lets you determine the name and other attributes of the BOM.	
Secondary Attributes	Opens the **Attributes** dialog box, where you can view and modify attributes of the BOM.
Source	
Scope of Bill of Material	**Entire Project** Lets you include the entire project in the scope. **Partial** Lets you include part of the project in the scope.
Partial Bill of Material	
Available if you set the **Scope of Bill of Material** list to **Partial**.	
Select Parent Objects	Lets you select parent objects to include in the partial bill of material.
Parent objects list	Lists the parent objects in the partial bill of material.
Add to the List	Lets you add parent objects to the list.
Remove from the List	Lets you remove parent objects from the list.

Location	
Part File	Lets you choose a location to store the BOM. You can modify the location only if you are creating a new BOM, and not if you are creating a new revision.

Coordinate Measuring Machine: Inspection Supplement

Introduction

Data Elimination and Data Filtering

Data Elimination means the removal of measured data points, sometimes called 'outliers', that are outside a range of standard deviations from the mean deviation. Data Filtering means a high pass, low pass, or band pass filter is applied to the measured data in order to isolate form deviation from surface texture. You can enable these and set the parameters using new groups in the feature dialogs and the method dialog

Example	Meaning
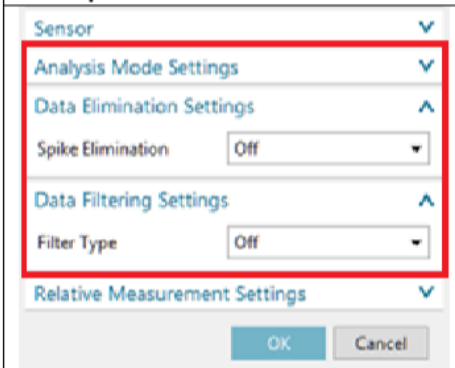	Data Elimination and Filtering are off.
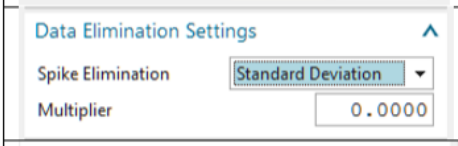	Data Elimination based on a standard deviation multiple.
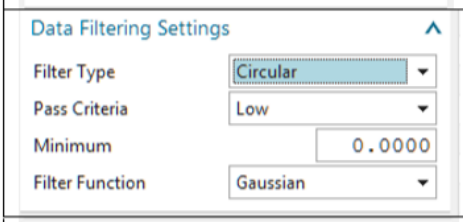	Low pass data filter
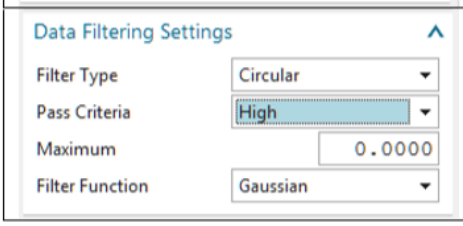	High pass data filter

These settings are supported by the DMIS 5.2 post-processor using a statement of the following format:

```
GEOALG/CIRCLE,LSTSQR,STDDEV_LIMIT,2.,FILTER,CIRCULAR,HIGH,15.,GAUSS
```

Other post-processors do not currently support these settings.

Head Touch on Outer Circles and Cylinders

Simulation of inspection paths using the PH20 in Head Touch mode has been improved for the following feature types:

- CIRCLE/OUTER
- CYLNDR/OUTER
- GCURVE on the surface of a CYLNDR/OUTER

Verify Program

Inspection programs can now be verified before sending them to the shop floor for execution. Many common errors are detected and reported in the NX information window.

- Feature not measured or constructed
- Datum not defined before a tolerance that references it
- Size tolerance missing when using MMC or LMC modifiers

Arc Scan using Rotary Table

Arc Scans may now be performed by bringing the probe into contact with the part, then rotating the part with the rotary table while holding the probe at a stationary XYZ. You can specify this on the Scan Arc dialog using a new choice for Scan Mode:

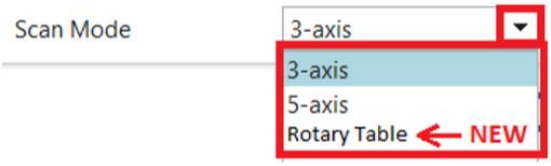

This is supported by the DMIS 5.2 post-processor using a statement of the following format:

```
PAMEAS/P(CIRCLE1_PATH_Scan_Arc),ROTARY,RT(ROTARY1)
```

Other post-processors do not currently support this statement type.

DMIS Support – Support for Valisys Programs

Inspection programs written using Valisys (eM-ProbeCAD) may now be imported into NX CMM with good success. Less than 10% of operations will need to be edited by hand. Support for the following statement types was added in NX12.0.2 MP8:

- DATSET statement
- MACRO and CALL statements
- CONST/POINT,…,BF
- Convert 3 character datum letters VP1,VS1,VT1 to valid datum letters
- Option to ignore BND1,BND2,BND3,BND4,F(VBND and BOUND/
- Option to ignore Comments
- OUTPUT that isnt a T() or F() format
- Valisys GEOALG formats
- GSURF/GCURVE Features
- Width Tolerance

- OUTPUT/R()
- TEXT/OPER
- ROTAB/
- SAVE/FA

Link PMI Processing of Ordinate Dimensions

When processing ordinate dimensions, the Link PMI function now inserts operations into the CMM program to establish a Part Coordinate System (PCS) at the origin of the ordinate dimension. If several ordinate dimensions are based on the same origin, they will share the same PCS. The PCS column in the operation navigator will show the PCS assigned to the CORTOL tolerance.

Link PMI Processing of Hole Callouts

The Link PMI function now links PMI Hole Callouts into the appropriate set of CMM Inspection operations. The following hole types are supported:

- Cylindrical Through Hole
- Threaded Hole
- Counterbored Hole
- Countersunk Hole
- Blind hole (non through hole)
- Tapered Hole

Inspection features, tolerances, and paths are created to measure the following characteristics:

- Cylinder Diameter
- Counterbore Diameter
- Countersink Angle
- Counterbore Depth (Using plane features)
- Countersink Depth (Using constructed circle)
- Hole Depth (Using point features)
- Tapered Hole Cone Angle

Note:

Hole depth is measured using point features in order to minimize inspection time.

Inspection Programming using Rotary Table

When programming a part involving a rotary table, the inspection part and rotary table will be displayed in the rotated position when viewing and editing inspection paths.

NX 1876

1876 UPDATES

1876 PROBLEM REPORTS

For a detailed list of PR fixes, see Fixed_Problem_Reports.csv included with the release documents.

Please see the table below for a summary of the PR updates included in this release.

Application	Count of PR Number
NX_SHEET_METAL	9
ROUTING_GENERAL	6
CAE	3
NXMANAGER	3
TRANSLATOR	2
ASSEMBLIES	1
BETA_EAP	1
DESIGN	1
FLEX_PC_DESIGN	1
FLEXIBLE_PIPE	1
KDA	1
ROUTING_ELEC	1
SHIP_DESIGN	1
TC_FEATURES	1
Total	**32**

1876 ENHANCEMENTS

Please see below for a list of enhancements included in this release.

ERs

- ER9071549 - FPC Design App - Attach bodies to flex and bring them along when flattening

Line Designer: Plant Navigator

Introduction

Creating End Items in the Plant Navigator

What is it?

In the Line Designer application, you can now create the end items for the components in the **Plant Navigator**. You can:

- Create end items in the **Plant Navigator**.
- Load the end items as a single component either as an item or as an occurrence, in the **Plant Navigator**. You can still see the geometry of all end items in the graphics window.
- Modify the end items for further design.
- Expand the end item structure using the **Expand End Items** option and collapse the end item structure using the **Create/Collapse End Item** option.
- Remove the end item state from the **Plant Navigator** using the **Remove End Item Assembly State** option.

Why should I use it?

You can now quickly navigate through the **Plant Navigator** tree structure. Also creating end items in a plant layout helps you reduce the number of BOM lines included in the structure, in the **Plant Navigator**, and you can create the desired structure of the plant layout.

Where do I find it?

Application	**Line Designer**
Plant Navigator	Right-click the component or work area object→ **Create/Collapse End Item Expand End Items** **Remove End Item Assembly State**

Working with end items in the Plant Navigator

When you load a plant layout with a large number of assemblies and components and want to navigate to an assembly, you need to scroll throughout the plant structure to that assembly, which takes more time. To simplify the layout structure and to focus on the assembly of interest, you can display these assemblies as a single Bill of Material (BOM) line using **Create/Collapse End Item** shortcut menu option.

Creating end items in a plant layout helps you reduce the number of BOM lines included in the

structure in the **Plant Navigator,** and you can create the desired structure for the plant layout.

When you select the customer default **Load End Items Defined in Teamcenter**, you can easily navigate in the **Plant Navigator** tree structure of a plant layout using the **Create/Collapse End Item** shortcut menu option.

> ☑ **=** Load End Items Defined in Teamcenter Note
>
> To find a customer default, choose **File** tab → **Utilities** → **Customer Defaults**, and click **Find Default**  .

In Line Designer, when you load a plant layout, you can now:

- Create end items in the **Plant Navigator**. To avoid affecting instances of the component in other structures, you can use the **Occurrence** option to create end items.
- Load the end items as a single component either as an item or as an occurrence, in the **Plant Navigator**. You can still see the geometry of all the end items in the graphics window.
- Modify the end items for further design.
- Expand the end item structure using the **Expand End Items** option, and collapse the end item structure using the **Create/Collapse End Item** option.
- Remove the end item state from the **Plant Navigator** using the **Remove End Item Assembly State** option.

Discrete Drivetrain: Additional Motion Bodies

Introduction

Pattern Elements now support the definition of Additional Motion Bodies.

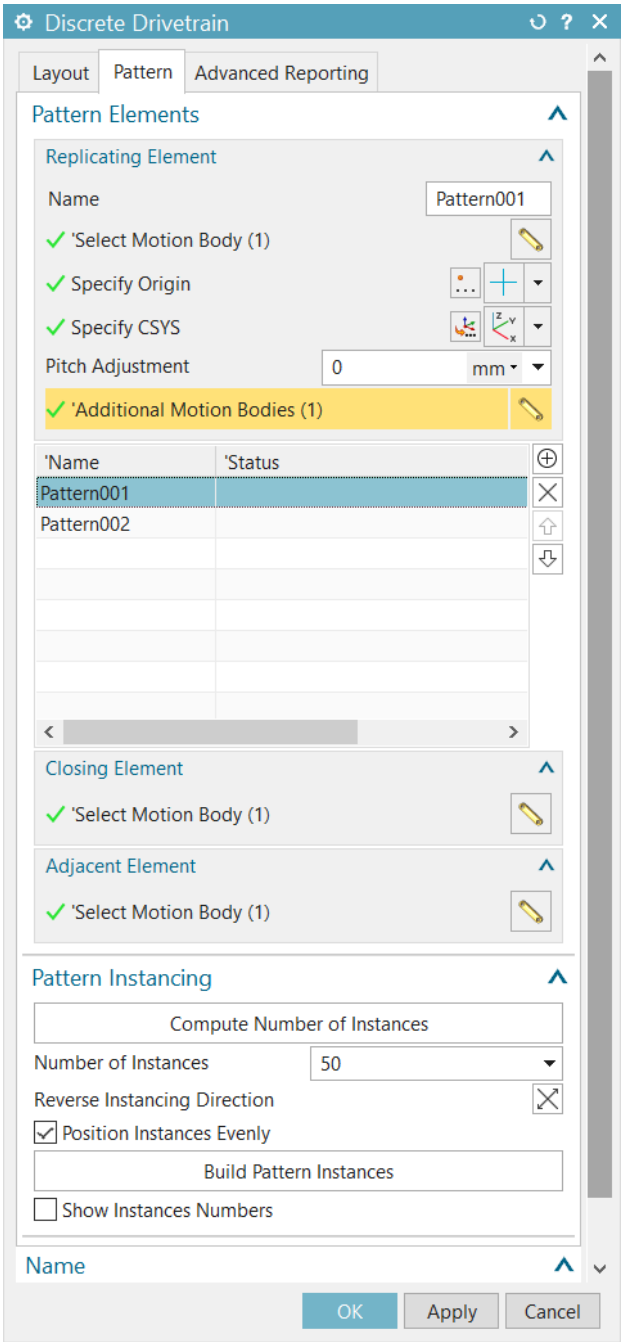

Additional Motion Bodies

The Motion Body selected in Select Motion Body is treated as the main Motion Body in this Pattern Element. Additional Motion Bodies in this list can be replicated and passively positioned as part of the Pattern Element along with the main Motion Body. These Additional Motion Bodies maintain their position and orientation relative to the main Motion Body in a pattern instance.

Additional Motion Bodies may be connected to the main Motion Body or to each other. Any Motion elements like joints, forces or constraints which connect them are also replicated when Build Pattern Instances is clicked.

Note:

Additional Motion Bodies may NOT be connected to a neighboring Pattern Element's main Motion Body or additional Motion Bodies. Such connections are not replicated when Build Pattern Instances is clicked.

Sheet Metal: Component Placement Enhancement

Introduction

Associate Object

When you create a Flat Solid in the Flexible Printed Circuit Design application with Transform Components option set to Body, the components associated with the faces of the formed body using the Associate Object command are copied, and these copies are transformed to the corresponding faces in the flattened body.

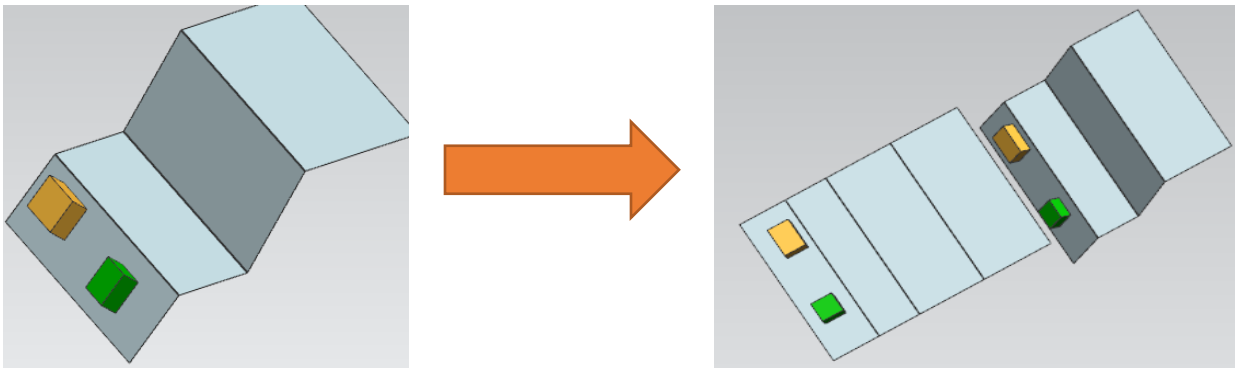

GLOBAL TECHNICAL ACCESS CENTER

Installation assistance

For additional installation assistance, or to report any problems, contact the Global Technical Access Center (GTAC).

Website:
http://support.industrysoftware.automation.siemens.com/gtac.shtml

Phone:
United States and Canada: 800-955-0000 or 714-952-5444

Outside the United States and Canada: Contact your local support office.